AS85049/43 Series
Cable clamp strain relief - Aluminum 45°

For connectors :
- AS50151 solder
- EN2997 & EN3646
- MIL-DTL-26482 Series 2
- MIL-DTL-83723 Series 3

Ordering information

Basic Series	M85049/43	-	10	N
Self-locking option **- :** Non self-locking				
Shell size **8, 10, 12, 14, 16, 18, 20, 22, 24, 28, 32, 36, 40, 44, 48**				
Material and plating **N:** Aluminum, electroless nickel **W:** Aluminum, olive drab cadmium over electroless nickel, 1000 hours salt spray				

Dimensions

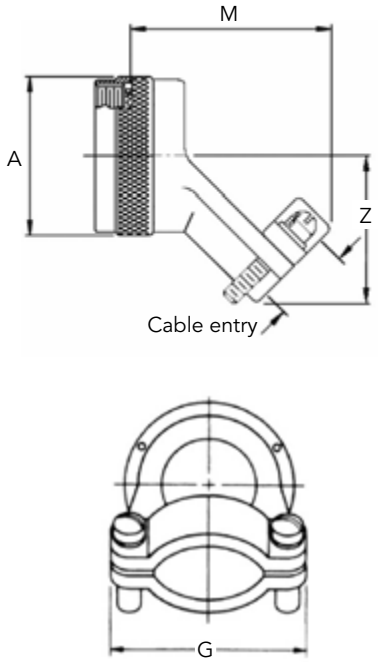

Shell size	Ø A maxi		Gmaxi		M maxi		Z maxi		Cable entry mini		Cable entry maxi	
	inch	mm	inch	mm	inch	mm	inch	mm	inch	mm	inch	mm
8	0.617	15.67	0.782	19.86	1.650	41.91	0.772	19.61	0.125	3.20	0.204	5.20
10	0.734	18.64	0.862	21.89	1.694	43.03	0.803	20.40	0.187	4.70	0.286	7.30
12	0.858	21.79	1.018	25.86	1.768	44.91	0.866	21.00	0.291	7.40	0.416	10.60
14	0.984	24.99	1.076	27.33	1.840	46.74	0.928	23.57	0.351	8.90	0.476	12.10
16	1.112	28.24	1.349	34.26	1.916	48.67	0.991	25.17	0.501	12.70	0.625	15.90
18	1.218	30.93	1.481	37.62	2.034	51.66	1.110	28.19	0.518	13.20	0.706	17.90
20	1.345	34.16	1.587	40.31	2.078	52.78	1.172	29.77	0.581	14.80	0.831	21.10
22	1.468	37.28	1.688	42.88	2.122	53.90	1.235	31.37	0.644	16.40	0.956	24.30
24	1.593	40.46	1.805	45.85	2.166	55.02	1.297	32.94	0.706	17.90	1.081	27.50
28	1.969	50.01	2.050	52.07	2.461	62.51	1.543	39.19	0.750	19.10	1.187	30.10
32	2.219	56.36	2.416	61.37	2.549	64.75	1.668	42.37	0.875	22.20	1.250	31.80
36	2.469	62.71	2.526	64.16	2.595	65.91	1.793	45.54	0.938	23.80	1.375	34.90
40	2.719	69.06	2.596	65.94	2.599	66.01	1.918	48.72	0.938	23.80	1.500	38.10
44	2.969	75.41	2.890	73.41	2.860	72.64	2.132	54.15	1.188	30.20	1.750	44.50
48	3.219	81.76	3.374	85.70	2.918	74.12	2.257	57.33	1.312	33.30	1.875	47.60

Note: All dimensions are in inches and millimeters (inch/mm). For complete dimensions, see the applicable Military Specification.
Cable entry is defined as the envelope area of the cable or wire bundle. It is not intended for inspection criteria.