AS85049/39 Series
Cable clamp strain relief - Aluminum 90°

For connectors:
- MIL-DTL-38999 Series III & IV
- EN3645

Ordering information

Basic Series	M85049/39	S	11	N

Self-locking option
S: Self-locking, detented - utilizes an audible detented anti-decoupling device.
N: Self-locking, non detented - utilizes an internal captivated anti-decoupling device (self-seating) with no audible clicking mechanism.
- : Non self-locking

Shell size
9, 11, 13, 15, 16, 17, 19, 21, 23, 25

Material and plating
A: Aluminum, black anodize
N: Aluminum, electroless nickel
S: Stainless steel, passivated
W: Aluminum, olive drab cadmium over electroless nickel, 500 hours salt spray

Dimensions

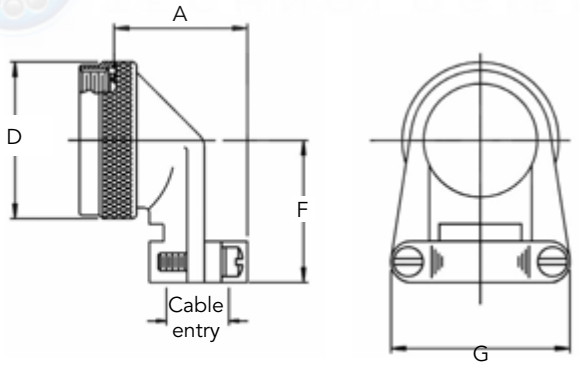

Shell size	A maxi		Ø D maxi		F maxi		G maxi		Cable entry mini		Cable entry maxi	
	inch	mm	inch	mm	inch	mm	inch	mm	inch	mm	inch	mm
9	1.01	25.7	0.858	21.79	1.00	25.4	0.85	21.6	0.098	2.49	0.234	5.94
11	1.01	25.7	0.984	24.99	1.10	27.9	0.90	22.9	0.153	3.89	0.234	5.94
13	1.21	30.7	1.157	29.39	1.10	27.9	1.10	27.9	0.190	4.83	0.328	8.33
15	1.26	32.0	1.279	32.49	1.25	31.8	1.15	29.2	0.260	6.60	0.457	11.61
17	1.41	35.81	1.406	35.71	1.30	33.0	1.30	33.0	0.283	7.19	0.614	15.60
19	1.51	38.4	1.516	38.51	1.35	34.3	1.50	38.1	0.325	8.26	0.634	16.10
21	1.66	42.2	1.642	41.71	1.60	40.6	1.60	40.6	0.343	8.71	0.698	17.73
23	1.76	44.7	1.768	44.91	1.75	44.5	1.70	43.2	0.381	9.68	0.823	20.90
25	2.91	73.9	1.889	47.98	1.85	47.0	1.80	45.7	0.418	10.62	0.853	21.67

Note: All dimensions are in inches and millimeters (inch/mm). For complete dimensions, see the applicable Military Specification.
Cable entry is defined as the envelope area of the cable or wire bundle. It is not intended for inspection criteria.