Relay Sockets

Mates with MS83726, M83536 & M6106 Relays

MIL-PRF-12883/52, MIL-PRF-12883/53

RSE Track Mount 2, 3, & 4 Pole & Mounting Track

Operating Range

Temperature:
-65ºC to 125ºC
Insulation Resistance:
1000 Megaohms Min.
Dielectric Withstanding Voltage:
1500 VRMS at Sea Level
700 VRMS at 80,000 ft.
Vibration:
MIL-STD-202, Method 204
Test Condition G
Shock:
MIL-STD-202, Method 213
Test Condition C

Materials

Socket Body:
Polyetherimide per ASTM-D5205
Grommet:
Silicone Rubber per A-A-59588
Contact Retainers:
Beryllium Copper
Socket Contacts:
Copper Alloy, Hard Gold Plated in Accordance with MIL-G-45204

Socket Dimensions

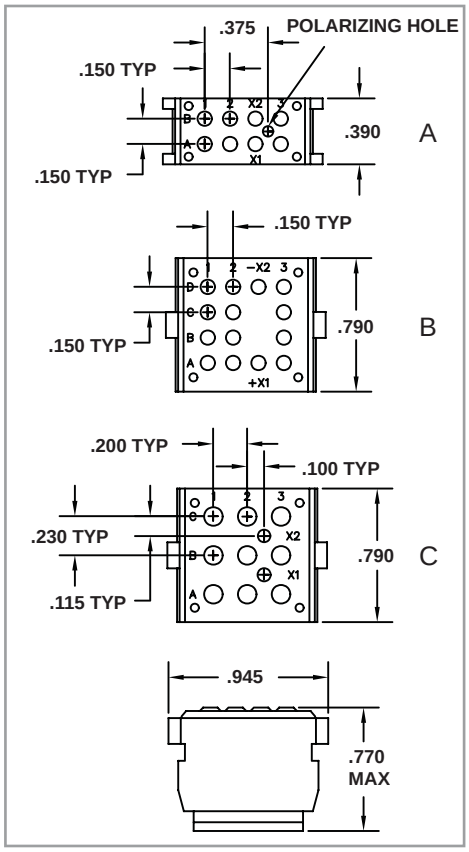

Relay Socket Weight

Relay Socket	Pounds	Grams
RSE116175	.016	7
RSE116185	.031	14
RSE116195	.031	14

Low Profile Relay Sockets

MIL P/N M12883*	APCD P/N*	QTY	Size[1]	Contact P/N	Config.	Mating Relay
/52-001	RSE116175	8	20/20	/101-553	A	M83536/2-028, M83726/27, /25
/52-002	RSE116185	14	20/20	/101-533	B	M8536/6-025
/52-003	RSE116195	9	16/16	/101-554	C	M83536/22-025
		2	20/20	/101-553		

*These Relay Sockets are used in the track mount system with track M12883/53-001, Amphenol Pcd P/N RST145005

[1] *Mating End / Wire Barrel*

M12883/53-001 Mounting Track Dimensions

Track Dimensions

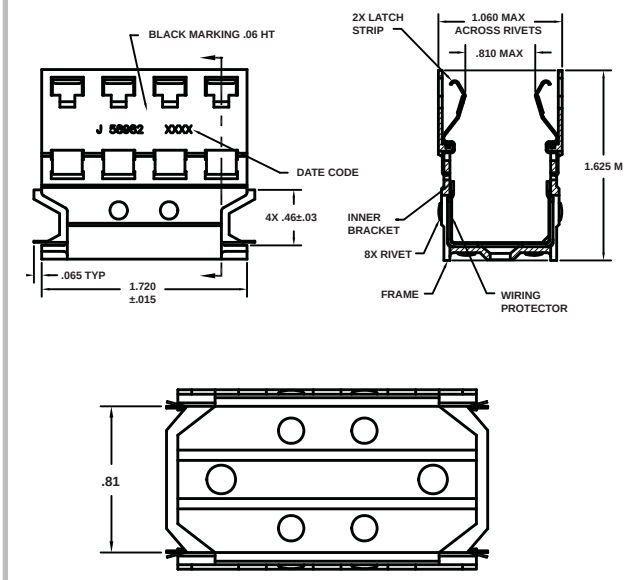

Track Materials

Outer Track:
Aluminum Alloy per QQ-A-225.
Chemical Coating per
MIL-C-5541, Class 3
Inner Brackets and Rivets:
Stainless Steel per QQ-S-766, Passivated
Latch:
Beryllium copper #172 per QQ-C-533
Bright Finish
Wiring Protector:
Aramid Paper per MIL-I-24202
Track Operating Range:
-65ºC to 125ºC

Track Weight

Part Number	Pounds	Grams
RST145005	.053	24

Use tool M6106/32-001 to remove M1288/52 sockets.
Use tool M6106/31-001 to remove relays from this mounting bracket.