REV	SH	DWG NO.
B	1	315-2022-600

THIS DOCUMENT CONTAINS PROPRIETARY INFORMATION AND EXCEPT WITH WRITTEN PERMISSION OF TRI-STAR ELECTRONICS INT'L, INC., SUCH INFORMATION SHALL NOT BE PUBLISHED, OR DISCLOSED TO OTHERS, OR USED FOR ANY PURPOSE, AND THE DOCUMENT SHALL NOT BE DUPLICATED IN WHOLE OR IN PART.

REVISIONS

ZONE	LTR	DESCRIPTION	DATE	APPD
	A	REDRAWN & REVISED PER E.O. 17943	1/26/07	LBO
	B	REVISED PER E.O. 21554	8/29/12	HLe

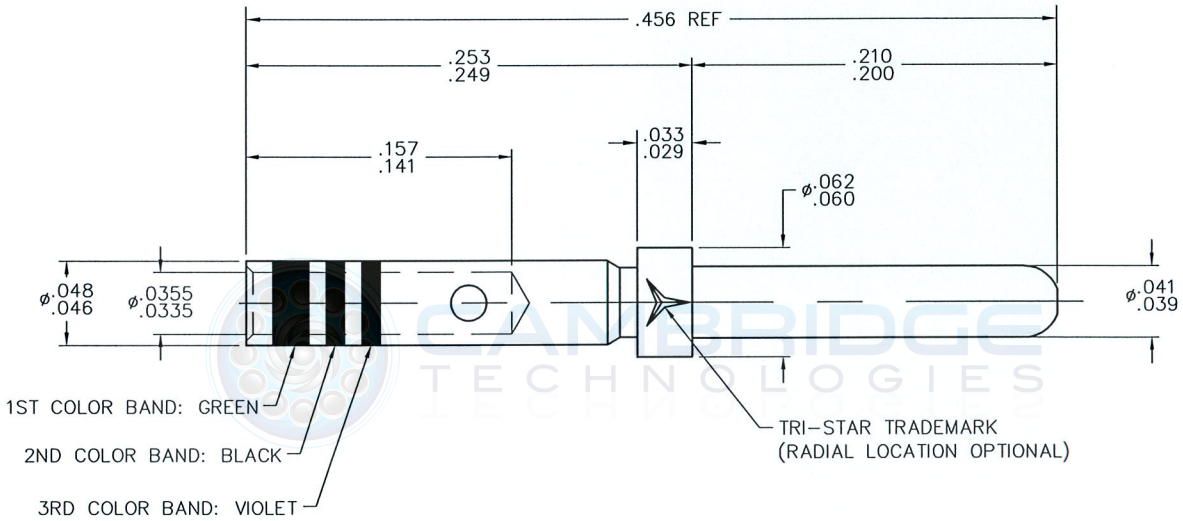

5. MEETS ALL APPLICABLE REQUIREMENTS OF AS39029.
4. CRIMP TOOL DATA:
   BASIC CRIMP TOOL: M22520/2-01
   POSITIONER: M22520/2-32

3 FINISH: GOLD PLATE PER ASTM B 488, TYPE IIC, (.000050 MIN THK) OVER NICKEL PLATE PER SAE-AMS-QQ-N-290.

2 MATERIAL: SUITABLE COPPER ALLOY PER AS39029.

1. www.tri-starelectronics.com

NOTES: (UNLESS OTHERWISE SPECIFIED)

SALES DRAWING

NEXT ASSEMBLY	USED ON
APPLICATION	

QTY REQ'D	FSCM NO.	PART OR IDENTIFYING NO.	NOMENCLATURE OR DESCRIPTION	MATERIAL SPECIFICATION	ITEM NO.

PARTS LIST

UNLESS OTHERWISE SPECIFIED DIMENSIONS ARE IN INCHES. TOLERANCES ARE:
ANGLES ±30' .XX ±.01 .XXX ±.005
DO NOT SCALE DRAWING

MATERIAL: 2 TREATMENT: FINISH: 3

REF:

CONTRACT NO.
RATING:

APPROVALS		DATE
DRAWN:	F. RODRIGUEZ	1-25-07
CHECKED:	LBO	1-26-07
APPROVED:	LBO	1-26-07
APPROVED:		

TRI-STAR ELECTRONICS INT'L, INC.
2201 ROSECRANS AVENUE, EL SEGUNDO, CA 90245

DWG TITLE: CONTACT, ELECTRICAL CONNECTOR, PIN, CRIMP REMOVABLE, #20

SIZE	CAGE CODE	DWG NO.	REV
A	55104	315-2022-600	B

SCALE: NONE CAD NO: 10X SHEET 1 OF 1